INSTRUCTION SHEET

***for:* Part No. 4640**

MOUNTING INSTRUCTIONS FOR *HELLA* AUTOMOTIVE BATTERY SWITCH

Purpose:	To isolate the battery from the electrical system. Not to be used as an on/off switch.
Voltage:	0-48V DC
Current rating:	
Continuous	275 amps (1Hour. max.)
Maximum	Cranking = 1250 amps (10 sec. max.) Intermittent = 455 amps (5min. max.)
Terminal size:	10 mm Ø
Spare parts available:	Spare knob - Part Number 4641

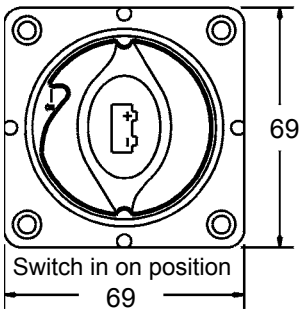

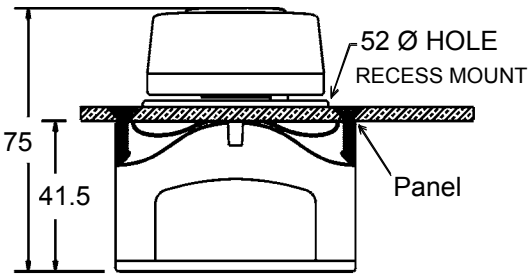

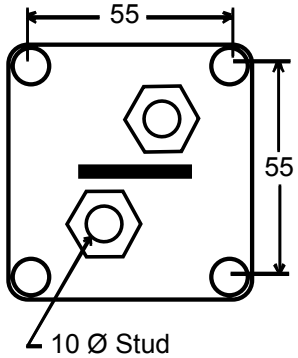

ALL DIMENSIONS IN MILLIMETRES

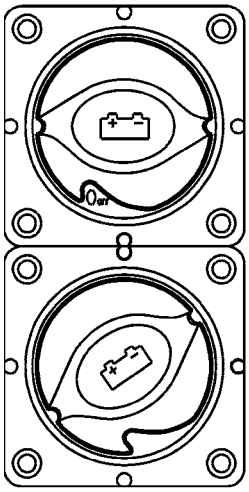

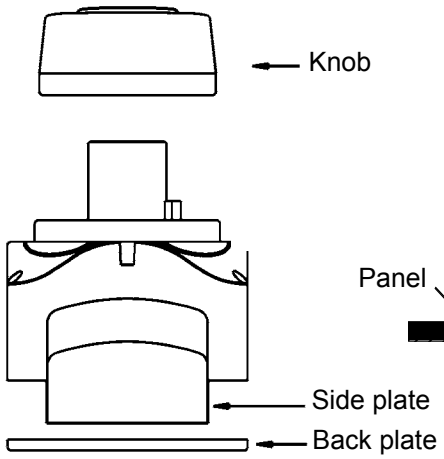

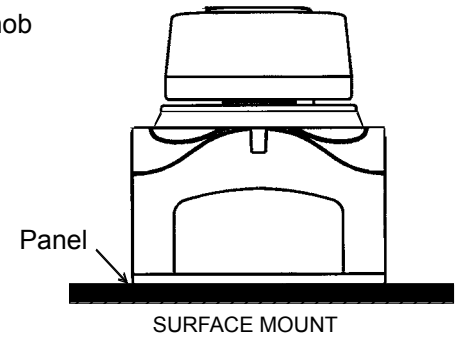

Recess Mount	Surface Mount
Minimum length 50mm plus panel thickness	Minimum length 30mm plus panel thickness

Mounting bolts 5mm Ø (Not included)

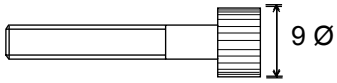

Mounting Instructions

Mount switch as shown above. Use quality terminals to avoid heat build up and voltage drop.
Mount battery leads to switch either from the rear or side of the switch, using supplied washers and nuts.
To avoid short circuits, ensure all exposed electrical fittings are insulated.

Knob Removal

To remove the knob, push in and rotate 45° anti-clockwise from the OFF position.
The knob may now be removed. To insert knob reverse the above instructions.

Hella-New Zealand Limited
81-83 Ben Lomond Crescent
P.O. Box 51-427, Pakuranga
Auckland, New Zealand

For comments contact us on
Email: techfeedback@hella.co.nz

959 149-10 V03