INSTRUCTION SHEET
for: **2BA 980 607-xxx / 2BA 959 070-621/ HM070621**

APPLICATION AND MOUNTING INSTRUCTIONS

DuraLED® REAR DIRECTION INDICATOR LAMP

Multivolt 9 - 33 volts

Lens Marking and Installation Requirements

This lamp module, identified by lens marking E24 5850 and the HELLA logo was manufactured to comply with ECE Regulation 6 Category 2a for Rear Direction Indicator Lamps.

- A tolerance of +/-3 degrees applies on all mounting details.
- Lamp module mounting plane must be vertical to the ground.
- Lamp module reference axis must be parallel to the vehicle longitudinal axis.
- Lamp module centre line must be horizontal (P/N 2BA 980 607-0xx, 2BA 980 607-2xx and HM070621) or vertical (P/N 2BA 980 607-5xx and 2BA 980 607-7xx) to the ground.
- Lamp is approved to be mounted only with lens engraving "TOP" located correctly.
- Lamp module must be visible from 45° inboard and 80° outboard, as well as from 15° above and below the horizontal axis.
- At least two lamps are required.
- Lamps must not be mounted less than 350 mm and more than 1500 mm above the ground, two additional lamps can be mounted at a vertical distance no less than 600 mm from the mandatory lamps.
- Lamps must be mounted within 400 mm of the widest point of the vehicle and no closer than 600 mm together.

Please refer to ECE Regulation 48, for further details.

Note: Lamp does not include a reflex reflector.

Horizontal Mount
P/N 2BA 980 607-0xx, 2BA 980 607-2xx & HM070621

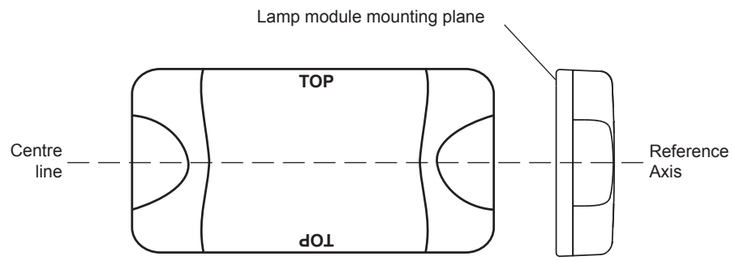

Vertical Mount
P/N 2BA 980 607-5xx & 2BA 980 607-7xx

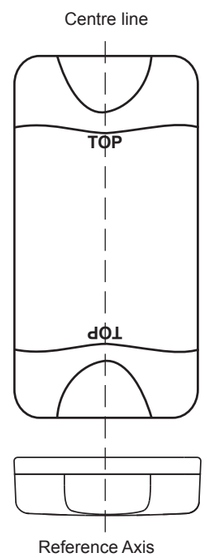

HELLA-New Zealand Limited, Auckland

INSTRUCTION SHEET

for: **2BA 980 607-xxx / 2BA 959 070-621/ HM070621**

Lamp Mounting Instruction

Screw Cap Removal

Carefully insert a small flat blade screwdriver between the cap and the lens and pull towards the lens, the cap will clip off.
To install the cap push in by hand until the top is flush with the lens.

Surface Mounting

- Drill two holes up to 6.5mm Ø at 148mm centres.
- 6mm Ø screws or bolts are recommended to mount the lamp using the mounting bushes provided.
- Lamp should be mounted on a flat surface.
- If passing the cable through a hole, ensure there are no sharp edges to cut or chafe the cable.
- Alternatively, cable can be routed through the end of the base.
- Connect cable as per chart below.
- Clip the screw caps on securely until flush with the lamp surface

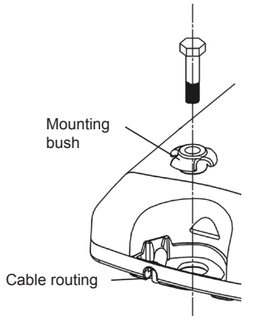

Note: Bolts not included

Note: When mounting lamp units side by side allow a gap of 5mm to ensure screw cap removal.

General Dimensions (in millimetres)

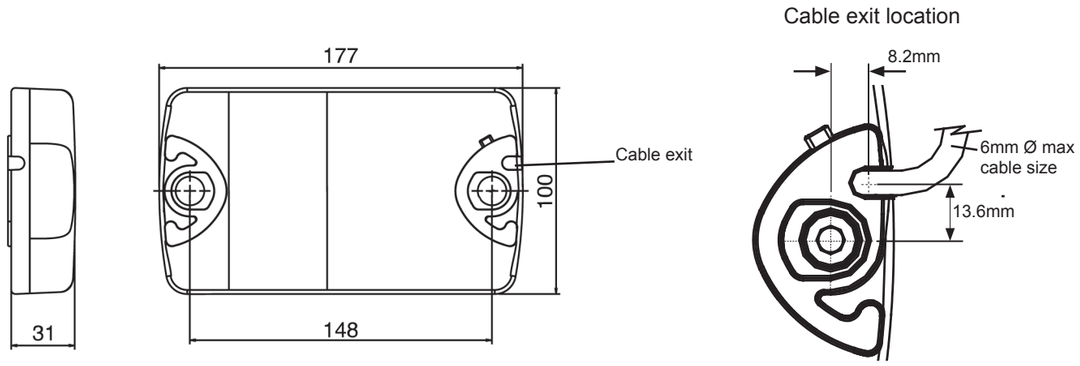

Wiring Colour Coding

Lamp is polarity conscious. The reversal of the polarity will not damage this product but will inhibit its function.
HELLA recommends wire connections be soldered, and heat shrink tubing applied to seal the joint.

Colour	Connect to	Power Consumption
White	Negative (-)	-
Yellow	Indicator (+)	4 watts
Blue	Indicator & Trigger pulse (+)	4 watts

NB: Lamp must be protected by a fuse rated at 5 amperes maximum.

Direction Indicator Lamps with trigger pulse work in conjunction with a failure detection system such as LED flasher units. If additional lamps are fitted beyond the amount supported by the failure detection system than they must be wired separately so as not to be detected.

Important Notes for Installer and Vehicle Owner

Introduction

LED signal and marker lamps offer many advantages over conventional bulb lamps. Significantly reduced power consumption, ultra long life and high tolerance to shock and vibration make the LED lamps the ideal choice for the commercial transport industry, where the cost of ownership versus the initial purchase price of the product is well understood.

Compatibility to existing electrical systems

It is important for the installer to ascertain the compatibility of the low power consumption LED lamps with the electrical and/or electronic systems of the complete vehicle, including trailers. In most cases the reduced power consumption is beneficial by imposing less demands on the entire electrical system.
For certain functions some electrical systems rely on a set power consumption for monitoring whether, for example, a trailer is connected.
Operation of this lamp using alternating current or modulated direct voltage will cause premature light failure.
HELLA recommends connecting ADR or ECE certified Multivolt LED signal and marker lamps to a continuous (unmodulated) 12V or 24V power supply to ensure safe light operation.

Bulb failure monitoring for indicator lamps

The indicator bulb failure warning (if fitted to the vehicle) relies on the full load of a 21-watt bulb in most cases. Multivolt LED lamps with trigger pulse have integrated electronics for failure checking, if operating correctly the lamp will pulse a resistive load during the flasher “on” cycle to simulate this load.
If the vehicle manufacturer does not guarantee indicator bulb failure control via the vehicle wiring system than Hella can supply electronic control and flasher units which make it possible to convert the indicator failure system to suit Multivolt LED lamps with trigger pulse.

Electromagnetic Compatibility (EMC)

This LED lamp in an electronic device. The electrical circuits contain components that suppress possible interference, both emission as well as susceptibility, to the limits prescribed in UNECE Vehicle Regulation No. 10.
To avoid false signals or interference, it is standard practice that sensitive instrumentation such as ABS and Tachometers etc. are provided with direct earths.

Protection against damage due to voltage spikes

This LED lamp is protected against damage from positive voltage spikes caused by events such as load dump conditions up to severity level 3 of ISO 7637-2 and contains a Transient Voltage Suppressor (TVS) designed to withstand a pulse of up to 5000 Watts.
The lamp is protected against reverse polarity connection and negative voltage spikes of up to 1000 volts.

Electric Welding

Electric Welding may damage the LED lamps. For LED lamps, HELLA recommends the negative connection to be wired isolated from the vehicle chassis. If the lamp uses the chassis as the earth return it is recommended that this earth return is disconnected during electric welding.

FIT AND FORGET - BY DESIGN

Congratulations, the product you have selected comes from ***HELLA*** - a world leader in LED lighting design.

Following the launch of the first LED automotive signal lamps in 1990, ***HELLA*** Design and Innovation continues to set new standards. ***HELLA*** innovative solutions have been incorporated into millions of lamps, engineered and tested to the most stringent standards, to suit the most demanding environmental conditions.

The cornerstone to the success of our products is our no compromise ***Fit and Forget - by Design*** philosophy which is incorporated into every step of the product life cycle.

In a world consuming finite resources at an ever faster rate, ***Fit and Forget - by Design*** is the right environmental choice that also makes perfect economic sense to customers that consider the total life cycle Cost of Ownership.

For general comments about HELLA's products please contact us on E-mail at techfeedback@hella.co.nz

Belongs to approval no: **E24 5850**
Gehört zur Gen.-Nr.:

Mounting instruction no:
Einbauanweisung Nr.:

Direction Indicator for automobile (horizontal and vertical version)
Fahrtrichtungsanzeiger für Kraftfahrzeuge (horizontale und vertikale Version)

Light source:
Lichtquelle:

Direction Indicator **24 non replaceable light emitting diodes**
Fahrtrichtungsanzeiger *24 nicht austauschbare LED's*

Design voltage: **13,5 or 28 V**
Prüfspannung:

Supply voltage: **9V to 33V**
Versorgungsspannung:

Nominal power: **4W**
Nennleistung:

⌑ = **Centre of** reference in accordance with the ECE-regulation-no. 6.
Bezugspunkt *nach der ECE-Regelung Nr. 6.*

✧ = **Centre of reference** for the definition for illuminating surface in accordance with the Council Directive 76/756EEC or ECE-regulation-No. 48 (see Annex A).
Bezugspunkt *zur Bestimmung der Grenzen der leuchtenden Fläche nach 76/756 EEC oder ECE Regelung-Nr.48.*
Markierung s. auf der Abschluss-Scheibe. Maße s. Anlage A.
Axis of reference: Parallel to the car center line and parallel to the road.
Bezugsachse: *Parallel zur Fahrzeuglängsachse und parallel zur Fahrbahn.*

The lamp can be assembled with two outer lenses, a colourless outer lens or a amber outer lens.
Die Leuchte kann mit einer glasklaren Lichtscheibe oder einer gelben Lichtscheibe zusammengbaut sein.

The device must be surface-mounted or flush-fitted according to the enclosed surface-mounting or flush fitting documents (e. g. sketch).
Der An- bzw. Einbau der Geräte hat nach anliegenden An- bzw. Einbauunterlagen (z. B. Skizze und Anlage A) zu erfolgen. 2008-05-14

Belongs to approval no: **E24 5850**
Gehört zur Gen.-Nr.:

Mounting instruction no:
Einbauanweisung Nr.:

Direction Indicator for automobile (horizontal version)
Fahrtrichtungsanzeiger für Kraftfahrzeuge (horizontale Version)

The Lamp can be mounted also rotated 180°.
Das Gerät darf 180° gedreht angebaut werden.

Front - View
Ansicht von vorne

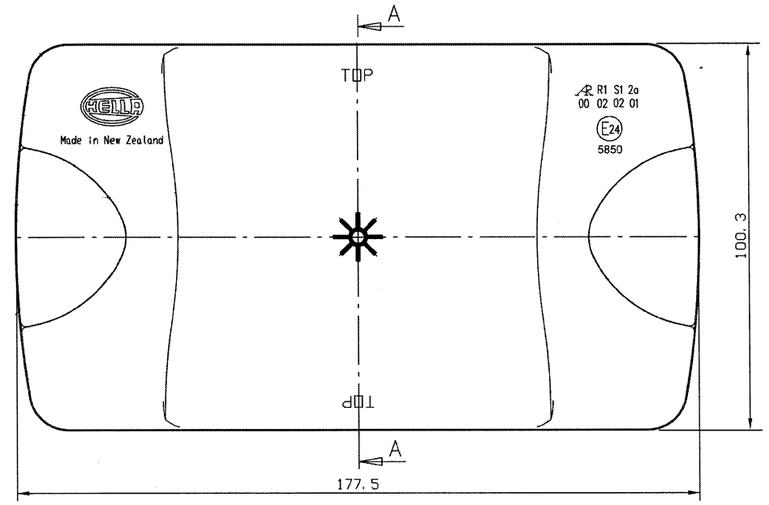

Side - View / Section A-A
Ansicht von der Seite / Schnitt A-A

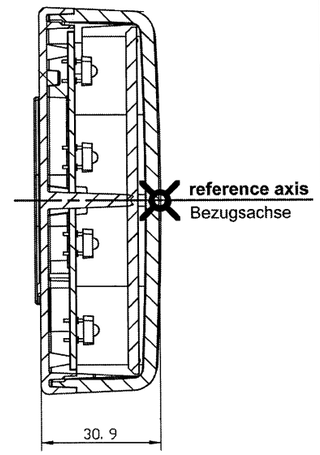

Back - View
Ansicht von Hinten

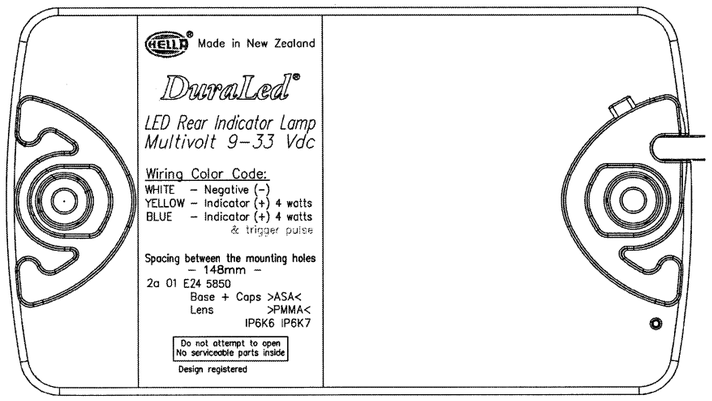

The device must be surface-mounted or flush-fitted according to the enclosed surface-mounting or flush fitting documents (e. g. sketch).
Der An- bzw. Einbau der Geräte hat nach anliegenden An- bzw. Einbauunterlagen (z. B. Skizze und Anlage A) zu erfolgen. 2008-05-14

Hella New Zealand	**Type** / *Typbezeichnung:* **2BA 980 607** **Version B**	**3 / 3**

Belongs to approval no: **E24 5850**
Gehört zur Gen.-Nr.:

Mounting instruction no:
Einbauanweisung Nr.:

Direction Indicator for automobile (vertical version)
Fahrtrichtungsanzeiger für Kraftfahrzeuge (vertikale Version)

The Lamp can be mounted also rotated 180°.
Das Gerät darf 180° gedreht angebaut werden.

Front - View
Ansicht von vorne

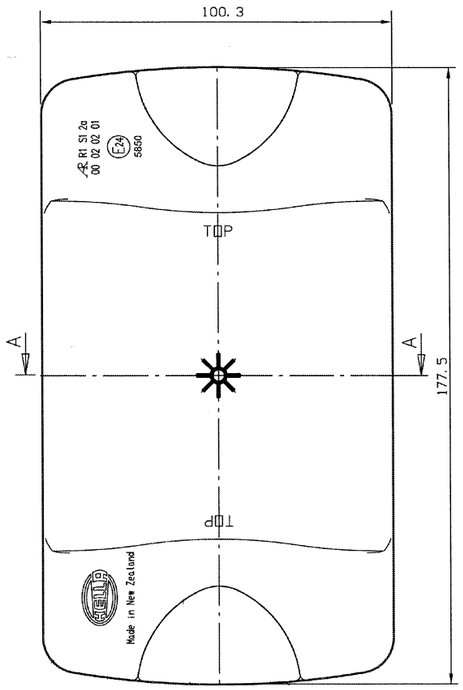

Back - View
Ansicht von Hinten

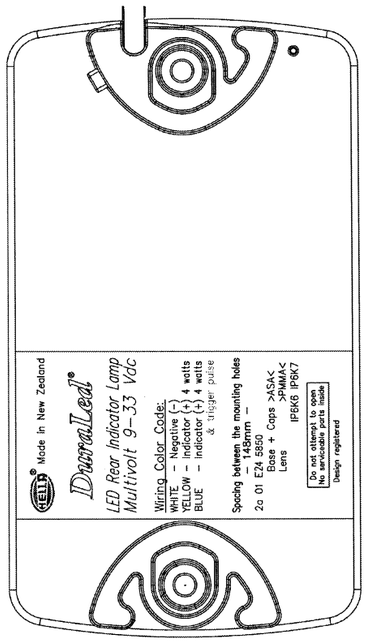

Top - View / Section A-A
Ansicht von oben / schnitt A-A

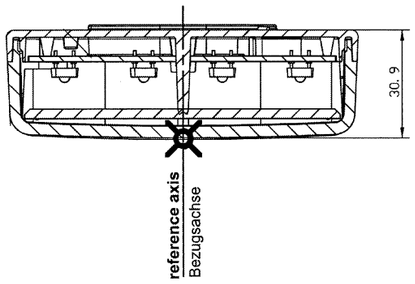

The device must be surface-mounted or flush-fitted according to the enclosed surface-mounting or flush fitting documents (e. g. sketch).
Der An- bzw. Einbau der Geräte hat nach anliegenden An- bzw. Einbauunterlagen (z. B. Skizze und Anlage A) zu erfolgen.

2008-05-14

Hella New Zealand	**Type:** *Typbezeichnung:* **2BA 980 607**	**Annex A** Anlage A

Belongs to approval no.: **E24 5850**
Gehört zur Gen. Nr.:

Mounting Instruction no.:
Einbauanweisung Nr.:

Determining the borders of the illuminated area of lamp in accordance with the Directives of the Council of the European Community on **"Mounting of lamps and light signalling equipment"** 76/756 EEC and ECE-Regulation No. 48, sub-section 2.9.2..
*Bestimmung der Grenzen der leuchtenden Fläche einer Leuchte gemäß den Richtlinien des Rates der Europäischen Gemeinschaften **"Anbau von Beleuchtungs- und Lichtsignaleinrichtung"** nach 76/756/EWG, bzw. ECE-Regelung Nr. 48, Absatz 2.9.2..*

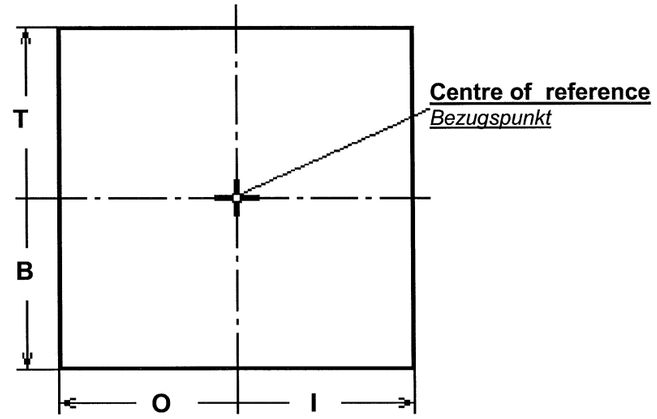

Category of Lamp *Gerätebezeichnung*	Top edge *Obere Grenze* (T) mm	Bottom edge *Untere Grenze* (B) mm	Outer edge Äußere Grenze (O) mm	Inner edge *Innere Grenze* (I) mm
Direction Indicator (Horizontal Mounting) *Fahrtrichtungsanzeiger (Horizontaler Anbau)*	39	39	40	40
Direction Indicator (Vertical Mounting) *Fahrtrichtungsanzeiger (Vertikaler Anbau)*	42	42	37	37

2008-05-14