HELLA New Zealand

Typbezeichnung: *Type:* **2SB 959 010-AA**

Gehört zur Gen.-Nr.: *Belongs to approval no:* E4 12373

Einbauanweisung Nr.: *Mounting instruction no:*

Schluss-Bremsleuchte *Tail- / Stop Lamp for vehicles*

Lichtquelle: *Light source:* **Schlussleuchte:** *Tail Lamp:* **12 nicht austauschbare LED's** *12 non replaceable light emitting diode* **Bremsleuchte:** *Stop Lamp:* **12 non-replaceable LED's** *12 non replaceable light emitting diode*

Der Ausfall einer LED wird durch höhere Stromzufuhr kompensiert. *The failure of one LED is compensated by upper current supply.*

¤ = **Bezugspunkt** nach den ECE-Regelung Nr. 7.
Centre of reference in accordance with the ECE-regulation-no. 7.

✧ = **Bezugspunkt** zur Bestimmung der Grenzen der leuchtenden Fläche nach 76/756 EEC oder ECE Regelung-Nr.48. Markierung s. auf der Abschluss-Scheibe, Maße s. Anlage A.
Centre of reference for the definition for illuminating surface in accordance with the Council Directive 76/756EEC or ECE-regulation-No. 48 (see Annex A).

Bezugsachse: Parallel zur Fahrzeuglängsachse und parallel zur Fahrbahn.
Axis of reference: Parallel to the car center line and parallel to the road.

Prüfspannung: *Design voltage:* 28 V / *28 V*

Versorgungsspannung: *Supply voltage:* 24 V / *24 V*

Nennleistung: *Nominal power:* 1 / 3 W / *1 / 3 W*

R-81 2a 02 01 E4 12373

Ansicht von vorn *Front view*

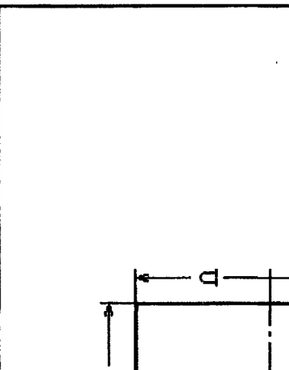

02 R-81 E4 12373

Ansicht von hinten *Back view*

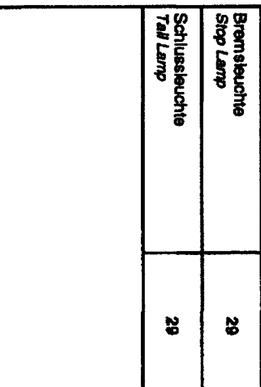

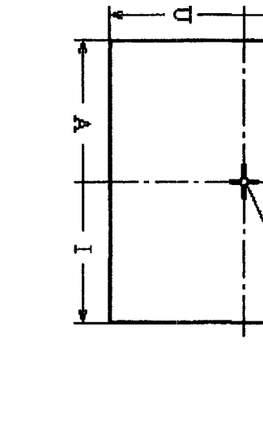

Ansicht von der Seite *Side view*

Bezugsachse *reference axis*

RDW

Der An- bzw. Einbau der Gerätte hat nach anliegenden An- bzw. Einbauunterlagen (z. B. Skizze und Anlage A) zu erfolgen.
The device must be surface-mounted or flush-fitted according to the enclosed surface-mounting or flush fitting documents (e. g. sketch).

2007-06-18

HELLA New Zealand

Type: 2SB 959 010-AA

Anlage A *Annex A*

Gehört zur G. Nr.: *Belongs to approval no.:* E4 12373

Anbauanweisung Nr.: *Mounting Instruction:*

Bestimmung der Grenzen der leuchtenden Fläche einer Leuchte gemäß den Richtlinien des Rates der Europäischen Gemeinschaften **"Anbau von Beleuchtungs- und Lichtsignaleinrichtung"** nach 76/756/EWG, bzw. ECE-Regelung Nr. 48, Absatz 2.9.2.

Definition of the illuminating surface of a device in accordance with the Council Directive 76/756/EEC or ECE-Regulation No. 48, clause 2.9.2.

Bezugspunkt *Centre of reference*

Gerätebezeichnung *Device / Function*	Obere Grenze *Upper Boundary* (O) mm	Untere Grenze *Lower Boundary* (U) mm	Äußere Grenze *Outer Boundary* (A) mm	Innere Grenze *Inner Boundary* (I) mm
Bremsleuchte *Stop Lamp*	29	29	29	29
Schlussleuchte *Tail Lamp*	29	29	29	29

19/06/2007

INSTRUCTION SHEET

for: ***Part No. 2SB 959 010-3xx***

APPLICATION AND MOUNTING INSTRUCTIONS

83mm ROUND STOP/TAIL LAMP
24 Volt

Features

- 12 LED design
- Low power consumption
- Ultra fast response time
- Reverse polarity protected
- Built-in transient spike protection
- Ultra long service life
- Fully sealed against dust and water
- Withstands most vibration and mechanical shock applications
- Manufactured from the latest "high tech" acrylic with enhanced impact and chemical tolerance
- Flush mount for low profile appearance

Lens Marking and Installation Requirements

This Stop/Tail Lamp, identified by lens marking E4 12373 and the HELLA logo was manufactured to comply with ECE Regulation 7 Rear Position (side) / Stop Lamps

- A tolerance of +/-3 degrees applies on all mounting details.
- Lamp mounting surface must be vertical to the ground, and at right angles to the longitudinal axis of the vehicle.
- Lamp must be visible from 45° inboard and 80° outboard, as well as from 15° above and below the horizontal axis.
- Lamp is approved to be mounted only with lens engraving "TOP" located correctly.

Note: Lamp does not include a reflex reflector.

Rear View **Top View** **Side View**

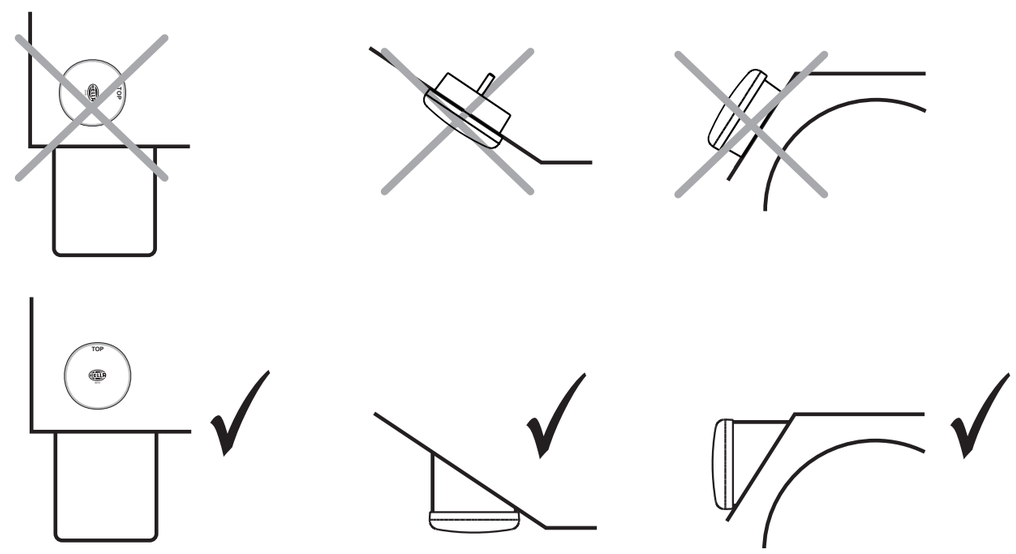

959 150-51 V04

Hella-New Zealand Limited, Auckland, New Zealand

INSTRUCTION SHEET

for: ***Part No. 2SB 959 010-3xx***

Lamp Mounting

1/4" Ø nut, bolt and washer have been supplied with this product. Do not mount the lamp where damage is likely to be sustained due to tie-downs and other securing devices.

Lamp should be mounted on a flat surface. Drill one mounting hole between 6.5mm and 8mm in diameter. A small 5mm location hole is also recommended to assist in mounting the lamp accurately and to stop the lamp from rotating during or after installation. This can be done using the location pin supplied*.

If passing the cable through a hole, ensure there are no sharp edges to cut or chafe the cable.

Drill a cable exit hole 6mm diameter in the position as shown on diagram below.

Ensure the lens engraving "TOP" is located correctly.

Connect lamp wiring as per chart below.

Try to keep the cable as long as possible, preferably join the cable inside a sealed cable junction box.

*location pin not supplied with all lamp models

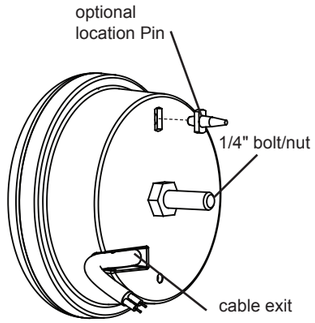

General Dimensions (mm)

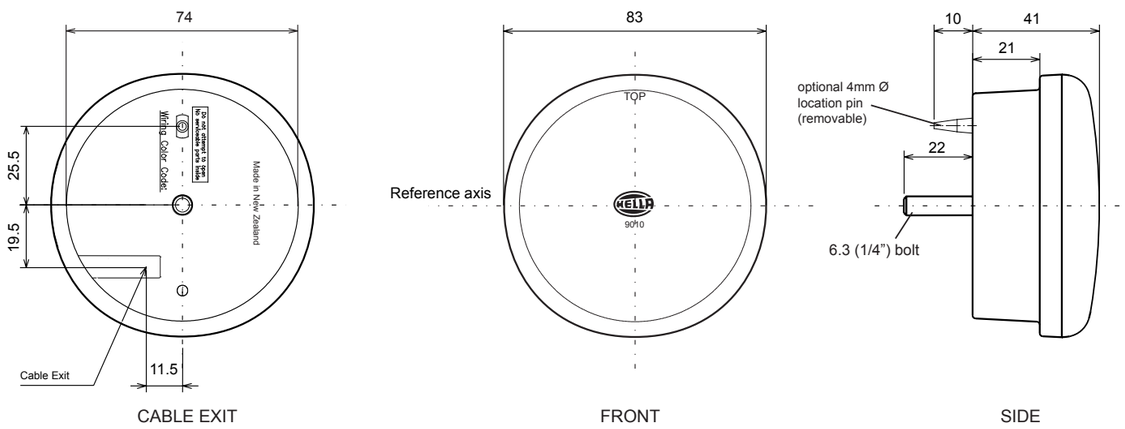

Wiring Colour Coding

This lamp is for 24 volt applications only.
LED modules are polarity conscious. Reverse polarity will not damage this product but will inhibit its function.
HELLA recommends wire connections be soldered, and heat shrink tubing applied to seal the joint.

Colour	Connect to	Power Consumption
White	Negative	(-)
Brown	Tail (+)	1 watt
Red	Stop (+)	3 watts

NB: Lamp must be protected by a fuse rated at 5 amperes maximum.

Important Notes for Installer and Vehicle Owner

Introduction

LED signal and marker lamps offer many advantages over conventional bulb lamps. Significantly reduced power consumption, ultra long life and high tolerance to shock and vibration make the LED lamps the ideal choice for the commercial transport industry, where the cost of ownership versus the initial purchase price of the product is well understood.

Compatibility to existing electrical systems

It is important for the installer to ascertain the compatibility of the low power consumption LED lamps with the electrical and/or electronic systems of the complete vehicle, including trailers. In most cases the reduced power consumption is beneficial by imposing less demands on the entire electrical system.
For certain functions some electrical systems rely on a set power consumption for monitoring whether, for example, a trailer is connected.

Electromagnetic Compatibility (EMC)

This LED lamp is an electronic device. The electrical circuits contain components that suppress possible interference, both emission as well as susceptibility, to the limits prescribed in UNECE Vehicle Regulation No. 10. To avoid false signals or interference, it is standard practice that sensitive instrumentation such as ABS and Tachometers etc. are provided with direct earths.

Protection against damage due to voltage spikes

This LED lamp is protected against damage from positive voltage spikes caused by events such as load dump conditions up to severity level 3 of ISO 7637-2 and contains a Transient Voltage Suppressor (TVS) designed to withstand a pulse of up to 5000 Watts.
The lamp is protected against reverse polarity connection and negative voltage spikes of up to 1000 volts.

Electric Welding

Electric Welding may damage the LED lamps. For LED lamps, HELLA recommends the negative connection to be wired isolated from the vehicle chassis. If the lamp uses the chassis as the earth return it is recommended that this earth return is disconnected during electric welding.

FIT AND FORGET - BY DESIGN

Congratulations, the product you have selected comes from ***HELLA*** - a world leader in LED lighting design.

Following the launch of the first LED automotive signal lamps in 1990, ***HELLA*** Design and Innovation continues to set new standards. ***HELLA*** innovative solutions have been incorporated into millions of lamps, engineered and tested to the most stringent standards, to suit the most demanding environmental conditions.

The cornerstone to the success of our products is our no compromise ***Fit and Forget - by Design*** philosophy which is incorporated into every step of the product life cycle.

In a world consuming finite resources at an ever faster rate, ***Fit and Forget - by Design*** is the right environmental choice that also makes perfect economic sense to customers that consider the total life cycle Cost of Ownership.

For general comments about Hella's products please contact us on E-mail at techfeedback@hella.co.nz